User Guide

SUB5&SUB1

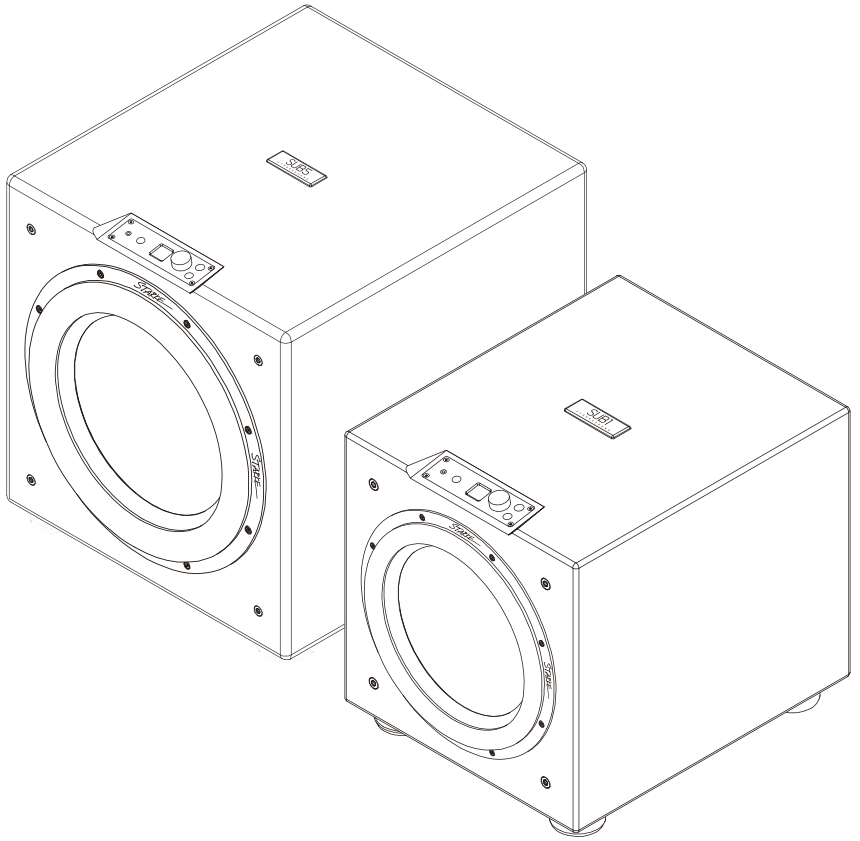

STARKE SOUND

Starke Sound Inc.
17810 S.Main St., Suite B, Gardena, CA 90248 starkesound.com

STARKE SOUND

Starke Sound Inc. 17810 S.Main St., Suite B, Gardena, CA 90248 ▪ starkesound.com

CONTENTS

SUB5 01

- Descriptions
- Main Specs
- Sizes and Weights

SUB1

- Descriptions
- Main Specs
- Sizes and Weights

Important safety instructions 05

SUB5 and SUB1 Operation Manual (Subwoofer Section)

I. Subwoofers Overview

II. Panel Description

- Function Button Description
- Rear Panel Connections

III. AccuCal™ Automatic EQ Calibration (Standalone Mode)

- Operation Steps
- Special Situation Handling

IV. Main Interface Operation

- Preset Switching
- Changing Device Name
- Auto EQ Status Switching

V. Mode Settings Operation Method

- Mode Description

VI. Parameter Settings

VII. Digital AES Daisy-Chain Operation

- Connection Method
- Connectioin Setup
- Notes

Appendix A: Technical Specifications

Appendix B: Product Information and Notices

- Break-in period
- Special Precautions
- Warranty Conditions
- Environmental Disposal Notice
- Disclaimer

SUB5

8Hz: All About That Bass, No Competition

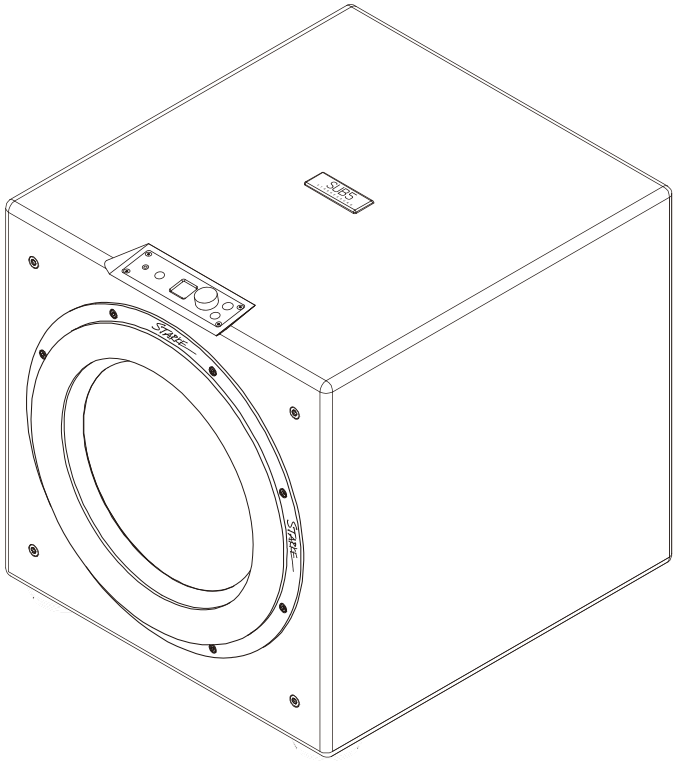

The Ultimate Bass Experience

The SUB5 is a true powerhouse, redefining what a subwoofer can achieve. With its enormous 17-inch driver, featuring the groundbreaking Umbraxis™ Diaphragm Support Structure and an industry-leading 120mm excursion, it creates bass that is not just heard but felt. Delivering up to 3000W RMS of sheer power, the SUB5 provides an unmatched listening experience with ultra-deep, dynamic, and distortion-free bass. Equipped with AccuCal™ room EQ for perfect sound calibration and DiBridge™ for lossless digital scalability, the SUB5 offers effortless integration and full control. Whether for music or movies, the SUB5 guarantees the most immersive and powerful bass performance available for your home.

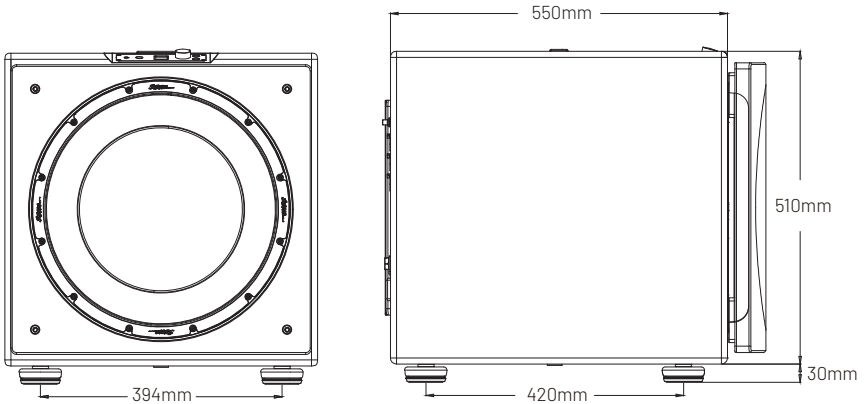

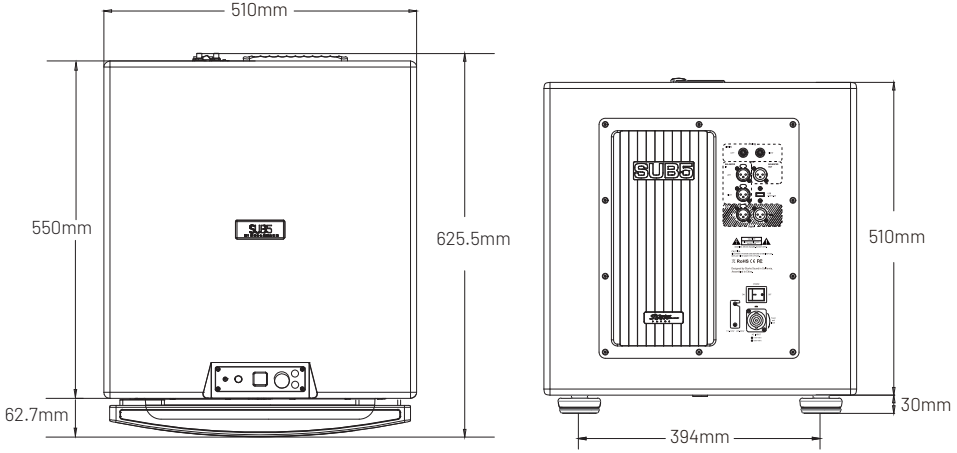

Main Specs

Driver Size	17 inch with **Umbraxis™** technology Extremely high excursion.
Amplifier	3000W Continuous RMS / 6000W Peak Power
Frequency response	8Hz-250Hz (-3dB, Half space)
Max SPL output	101 dB @10Hz (Half space, 1 meter) 113.5 dB@20Hz(Half space, 1 meter) 125 dB @40Hz-200Hz （Half space, 1 meter) 130 dB @40Hz-200Hz （Typical room, 1 meter)
Input terminals	Line In: RCA Stereo (Left & Right) Balanced Input: XLR Stereo (Left & Right) Balanced Output: XLR Digital In: AES Digital Out: AES
Finish	**TrueChrome™** Piano Lacquer
Color options	Samurai Black

Sizes and Weights

Full size	H 20.1 x W 20.1 x D 21.7 inches (without grille, without feet) H 21.3 x W 20.1 x D 24.6 inches (with grille, with feet) H 510 x W 510 x D 550mm (without grille, without feet) H 540 x W 510 x D 625.5mm (with grille, with feet)
Weight	164 lbs (74.5kg)
Shipping size	L 30.1 × W 26.7 × H 33.6 inches (including wheels) L 764.5 × W 677 × H 854.5mm (including wheels)
Shipping weight	260.2 lbs (118kg)

SUB1

Intelligent power that makes beauty shine

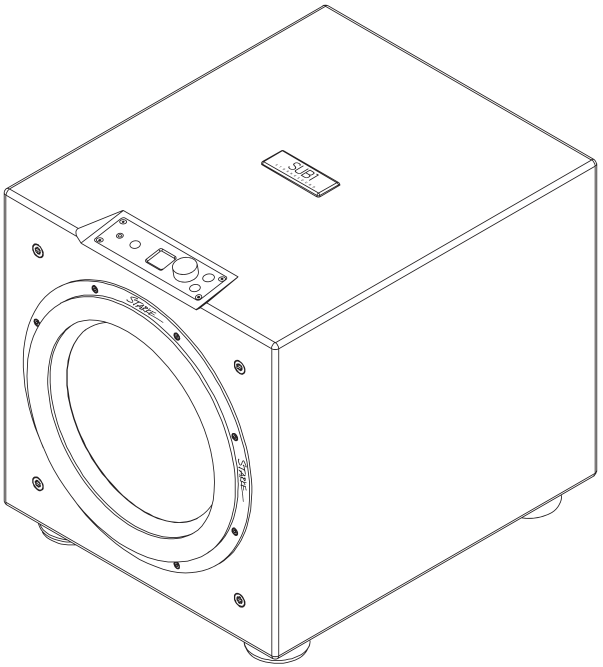

Smart Power, Pure Performance

The SUB1 is a mid-sized subwoofer designed to deliver exceptional bass performance with unparalleled precision. Its 12.5-inch driver, powered by 1000W RMS, produces deep and impactful bass for both music and movies. Featuring advanced technologies like AccuCal™ room EQ for perfectly tailored sound and DiBridge™ digital connectivity for seamless system scalability, the SUB1 ensures every low note is powerful, detailed, and distortion-free. Built with durability and reliability in mind, the SUB1 brings high-tech innovation and control to your home audio experience.

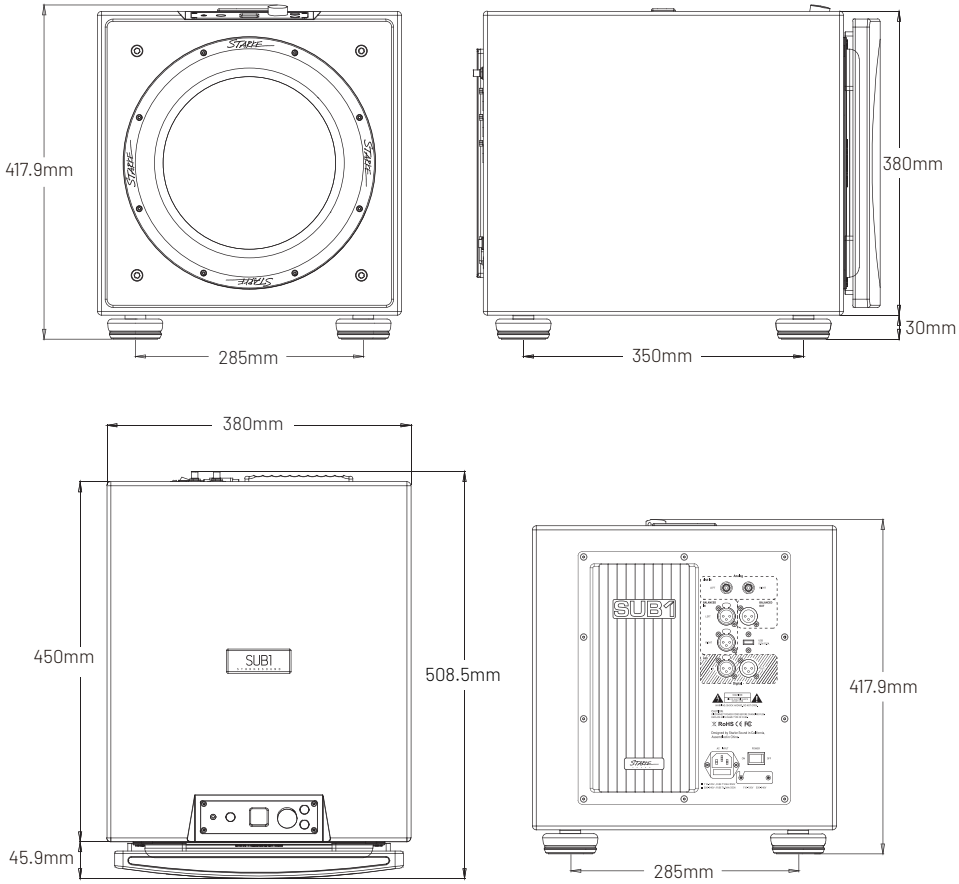

Main Specs

Driver Size	12.5 inch with LMF technology 1-piece carbon fibre sandwich cone
Amplifier	1000W Continuous RMS / 2000W Peak Power
Frequency response	18Hz-250Hz (-3dB, Half space)
Max SPL output	101 dB @10Hz (Half space, 1 meter) 113.5 dB@20Hz(Half space, 1 meter) 125 dB @40Hz-200Hz (Half space, 1 meter) 130 dB @40Hz-200Hz (Typical room, 1 meter)
Input terminals	Line In: RCA Stereo (Left & Right) Balanced Input: XLR Stereo (Left & Right) Balanced Output: XLR Digital In: AES Digital Out: AES
Finish	**TrueChrome™** Piano Lacquer
Color options	Samurai Black/Lunar White/Ember Noir

Sizes and Weights

Full size	H 15 x W 15 x D 17.7 inches (without grille, without feet) H 16.5 x W 15 x D 20 inches (with grille, with feet) H 380 x W 380 x D 450mm (without grille, without feet) H 417.9 x W 380 x D 508.5mm (with grille, with feet)
Weight	62 lbs (28.1kg)
Shipping size	L 24.4 x W 19.8 x H 20.7 inches L 620 x W 504 x H 525 mm
Shipping weight	76 lbs (34.5kg)

IMPORTANT SAFETY INSTRUCTIONS
PLEASE READ CAREFULLY



The exclamation mark in an equilateral triangle warns the user that the manual contains important instructions on how to use and look after the device.



The bolt of lightning in an equilateral triangle warns the user that the device has high voltage that could result in a risk of electric shock.

CAUTION

RISK OF ELECTRIC SHOCK
DO NOT OPEN

Warning: To prevent any risk of electric shock, do not remove the cover (or the back) from the device. There are no user- serviceable parts in this device. For maintenance or repairs, contact a qualified professional.

1. Read these instructions.

2. Keep these instructions.

3. Heed all warnings.

4. Follow all instructions.

5. Do not use this apparatus near water.

6. Clean only with dry cloth.

7. Do not block any ventilation openings. Install in accordance with the manufacturer's instructions.

8. Do not install near any heat sources such as radiators, heat registers, stoves, or other apparatus (including amplifiers) that produce heat.

9. Do not defeat the safety purpose of the polarized plug. A polarized plug has two blades with one wider than the other. The wide blade is provided for your safety. If the provided plug does not fit into your outlet, consult an electrician for replacement of the obsolete outlet.

10. Protect the power cord from being walked on or pinched particularly at plugs, convenience receptacles, and the point where they exit from the apparatus.

11. Only use attachments/ accessories specified by the manufacturer.

12. Use only with the cart, stand, tripod, bracket, or table specified by the manufacturer, or sold with the apparatus. When a cart is used, use caution when moving the cart/apparatus combination to avoid injury from tip-over.



13. Unplug this apparatus during lightning storms or when unused for long periods of time.

14. Refer all servicing to qualified service personnel. Servicing is required when the apparatus has been damaged in any way, such as power-supply cord or plug is damaged, liquid has been spilled or objects have fallen into the apparatus, the apparatus has been exposed to rain or moisture, does not operate normally, or has been dropped.

15. When the On/Off switch, or the mains plug or adapter connected to the product is used as a disconnect device, this device must remain readily accessible.

16. WARNING: To reduce the risk of fire or electric shock, do not expose this apparatus to water, rain or moisture. And the apparatus shall not be exposed to dripping or splashing and that no object filled with liquids, such as vases, shall be placed on the apparatus.

17. Do not insert any objects into the device's ventilation openings. They could come into contact with one of the high-voltage components or short-circuit them and cause a fire or electric shock. Do not spill liquid on the device.

18. Do not attempt to repair this device yourself. Opening it may expose you to hazardous voltages or to other risks. Contact a qualified professional for all maintenance work.

19. The equipment shall be used at maximum 35 degree Celsius ambient temperature (95°F).

To get the most out of your product, we recommend that you read the instructions in this booklet, then store it in a safe place to refer to in the future.

SUB5 and SUB1 Operation Manual (Subwoofer Section)

I. Subwoofers Overview

SUB5 and SUB1 are leading-edge fully digital subwoofers featuring powerful digital audio signal processing cores, multiple input and output options including both digital and analog connections. They support DiBridge™ technology, enabling daisy-chaining of multiple subwoofers via AES digital interface. The AccuCal™ technology provides manual EQ adjustment and automatic room EQ calibration functions, making these subwoofers suitable for various professional audio applications.

II. Panel Description

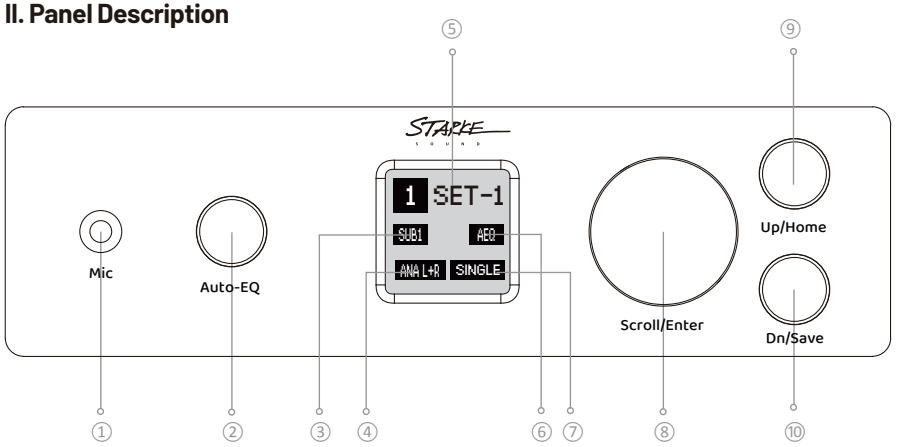

Function Button Description

1. Mic: Microphone port for connecting calibration microphone.
2. Auto-EQ: AccuCal™ Auto EQ button (long press to enter AccuCal™ auto EQ calibration mode, short press to bypass EQ).
3. Device Name: Displays current device name.
4. Signal Input Selection: Displays current input source.
5. Current Preset: Displays currently active preset.
6. AccuCal™ Auto EQ Status Indicator: Shows AccuCal™ auto EQ status (hidden when bypassed).
7. AES Link Mode Selection: Used to select DiBridge™ AES link mode.
8. Scroll/Enter: Parameter adjustment knob - rotate left to decrease, right to increase, short press to confirm.
9. Up/Home: Short press to return to previous step, long press to return to main interface.
10. Dn/Save: Short press to proceed to next step, long press to save current parameter settings (saving required after any parameter adjustment).

Rear Panel Connections

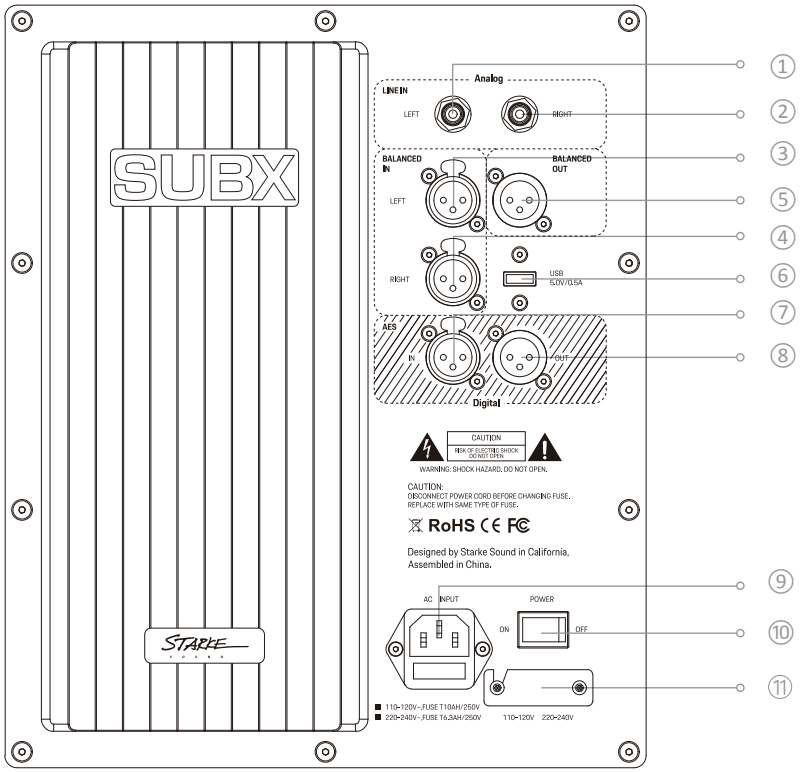

1. RCA Analog Left Channel Input: For analog left channel signal input.
2. RCA Analog Right Channel Input: For analog right channel signal input.
3. XLR Balanced Analog Left Channel Input: For balanced left channel signal input.
4. XLR Balanced Analog Right Channel Input: For balanced right channel signal input.
5. XLR Balanced Analog Signal Output: For analog signal loop-through output.
6. External USB Power Output: Provides power to external devices (5V/0.5A).
7. AES Digital Signal Input: For AES/EBU digital signal input.
8. AES Digital Signal Output: For AES/EBU digital signal output.
9. 220V/110V AC Power Input: For connecting AC mains power.
10. Power Switch: For turning the power on or off.
11. 110V/220V Voltage Selector Switch: For selecting input voltage.

III. AccuCal™ Automatic EQ Calibration (Standalone Mode)

The Auto EQ Calibration can be performed directly from the front panel, without the need for PC app assistance.

Operation Steps

1. Connect the calibration microphone to the device's Mic port.
2. Ensure the AES output mode in the lower right corner of the display is set to MASTER or SINGLE. If in SLAVE mode, the Auto-EQ button will be disabled, EQ will be automatically bypassed, and some functions will be hidden.

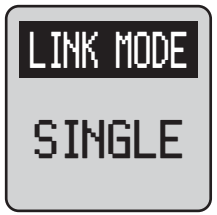

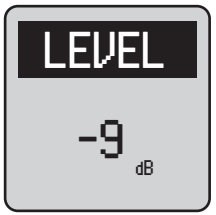



3. Press and hold the Auto-EQ button to initiate the AccuCal Auto EQ calibration process. The subwoofer will then conduct three consecutive frequency sweeps to analyze the room's acoustic response.







4. If the measurement is successful, rotate the knob to the right to start the calibration process. Calibration will take more than 10 minutes to complete.
5. After calibration is complete, short press the Auto-EQ button to exit the Auto EQ Calibration process.





6. Note:

6a) Auto-EQ is unavailable in SLAVE mode, and EQ function is automatically bypassed;

6b) The following four functions are unavailable in SLAVE mode. To use these functions, change from SLAVE mode to SINGLE or MASTER mode.



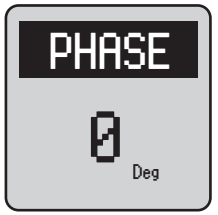





Special Situation Handling

- Sound Too Low: If prompted that sound is too low, rotate the knob to the left to exit the main interface, increase the volume or move the microphone closer to the sound source, then restart auto EQ calibration.
- Sound Too Loud: If prompted that sound is too loud, rotate the knob to the left to exit the main interface, decrease the volume or move the microphone away from the sound source, then restart auto EQ calibration.
- Noisy Environment: If prompted that the environment is noisy, rotate the knob to the left to exit the main interface, select a quieter environment, then restart auto EQ calibration.



Sound Too Low



Sound Too Loud



Noisy Environment

IV. Main Interface Operation

The main interface displays: Current Preset, AccuCal™ Auto EQ Status Indicator, Device Name, Input Selection, and AES Output Selection.

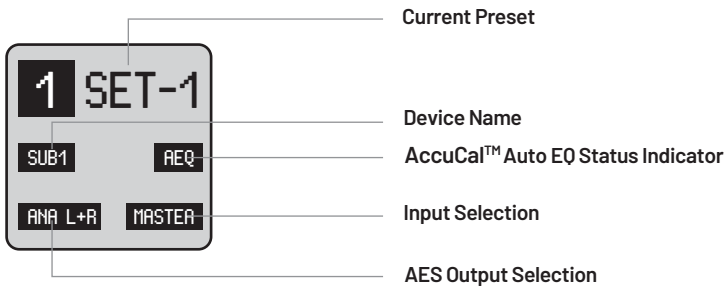

Preset Switching

1. SUB5 and SUB1 devices have nine presets (SET-1 to SET-9).
2. Rotate the knob to select the desired preset, then short press the knob to confirm.

Changing Device Name

- Change via the Starke Sound SUB subwoofer PC software.

Auto EQ Status Switching

- Short press the Auto-EQ button to bypass EQ, short press again to cancel bypass.

V. Mode Settings

Short press the Up/Home button to adjust the following five modes:

1. SOURCE (Input Selection): Select input signal source.
2. LINK MODE (AES Link Mode): Select AES link mode.
3. AUTO POWER (Auto Sleep Mode): Set whether the device enters auto sleep.
4. AEQ MODE (AccuCal™ Auto EQ Mode Selection): Select auto EQ Mode.
5. WIFI POWER (WIFI Switch): Control WIFI function on/off.

Operation Method

- Short press Up/Home to select the previous mode, short press Dn/Save to select the next mode.
- Long press Up/Home to return to the main interface, long press Dn/Save to save settings.

Mode Description

1. SOURCE (Input Selection)

Supports the following six input signal sources:

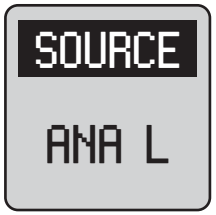

Analog signal left channel input



Analog signal right channel input

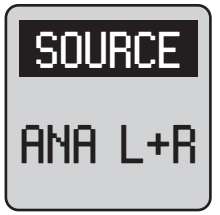

Analog signal left and right channel mixed input

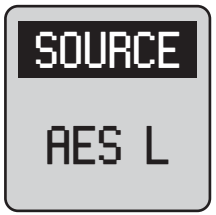

Digital signal left channel input

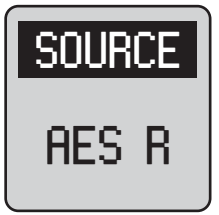

Digital signal right channel input

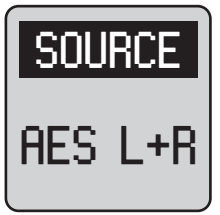

Digital signal left and right channel mixed input

2. LINK MODE (AES Link Mode)

Supports the following three modes:

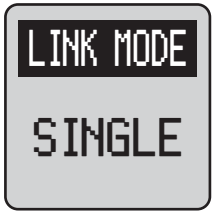

Independent mode, AES OUTPUT port outputs audio signal before DSP processing.



Master mode, AES OUTPUT port outputs audio signal after DSP processing.

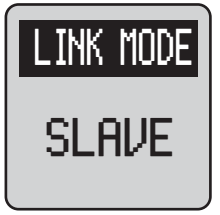

Slave mode, AES OUTPUT port outputs audio signal before DSP processing.

(This mode is used for AES digital daisy-chaining of subwoofers, see Section VII for details)

3. AUTO POWER (Auto Sleep Mode)

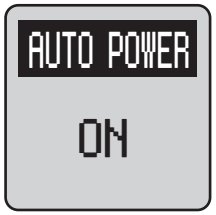

Enable auto sleep

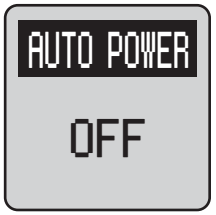

Disable auto sleep

(Select using the knob, then long press Dn/Save button to save)

4. AEQ MODE (Auto EQ Level Selection)



Low level



Medium level
(factory default)



High level

(Select using the knob, then long press Dn/Save button to save)

5. WIFI POWER (WIFI Switch)

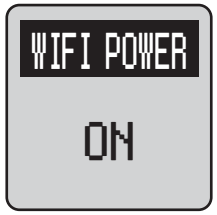

Enable WIFI function for connecting to computer to adjust parameters

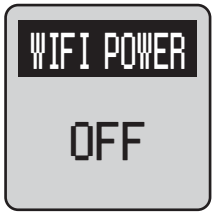

Disable WIFI function (factory default)

(WIFI is disabled by default. To adjust device parameters via PC software, turn on WIFI, long press Dn/Save button to save, then restart the device to connect with computer and use the companion software. Remember to click save on the computer or long press the Dn/Save button on the device to save parameters, then turn off WIFI)

VI. Parameter Settings

Short press Dn/Save to enter parameter setting mode to adjust the following five parameters:



LEVEL (Gain dB)
Adjustment range:
-96dB to 12dB



LOWPASS
(Crossover Point)
Adjustment range:
50Hz to 200Hz

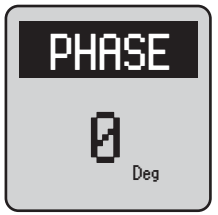

PHASE (Phase)
- Adjustment range:
0° to 180°

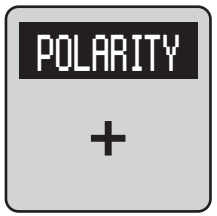

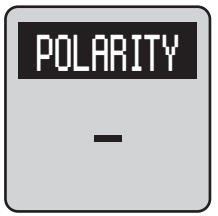

POLARITY (Output Polarity Setting)
Can be set to "+" or "–"

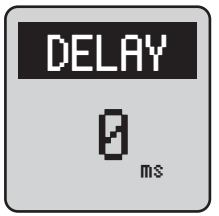

DELAY (Output Delay Setting)
Adjustment range:
0ms to 50ms

Short press Up/Home to select the previous parameter, short press Dn/Save to select the next parameter, long press Up/Home to return to the main interface, long press Dn/Save to save.

VII. Digital AES Daisy-Chain Operation

Link Mode Description

1. Parallel SINGLE:
Suitable for configurations with a single subwoofer or when the processor provides multiple subwoofer outputs.

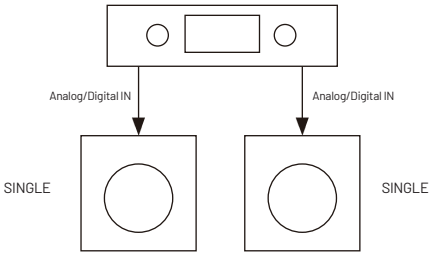

2. Cascade SINGLE:

Suitable when the processor has only one subwoofer output, allowing each subwoofer to be adjusted independently.

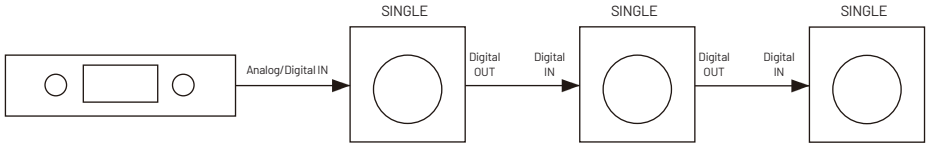

3. MASTER-SLAVE:

Suitable for setups where one subwoofer acts as the master to control all subsequent subwoofers.

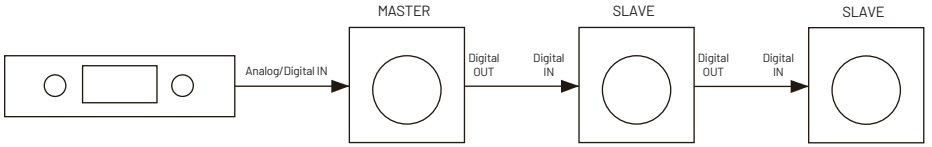

Connection Setup

1. Parallel SINGLE Connection:
   Set the LINK MODE of all subwoofers to SINGLE.
2. Cascade SINGLE Connection:

- If the first subwoofer uses an analog input, enable delay compensation on the first subwoofer and set it to 1.1 ms.

3. Master-Slave Connection:

- Set the LINK MODE of the first subwoofer to MASTER to designate it as the master.
- Set the LINK MODE of all subsequent subwoofers to SLAVE.
- Enable delay compensation on the master subwoofer and set it to 1.1 ms, regardless of whether the input is analog or digital.

Notes

- In slave mode, DSP high-pass settings and factory built-in EQ are bypassed.
- Low-pass frequency is fixed at 400Hz, low-pass slope is fixed at 24dB.
- In slave mode, only volume and delay can be adjusted; other functions are unavailable.

The above is the operation manual for SUB1 and SUB5. For more detailed information, please refer to the **AccuCal™** PC software that comes with the device, or contact technical support.

Appendix A: Technical Specifications

	SUB5	SUB1
Drivers	17 inch with **Umbraxis™** technology Extremely high excursion.	12.5 inch with LMF technology 1-piece carbon fibre sandwich cone
Amplifier	3000W Continuous RMS / 6000W Peak Power	1000W Continuous RMS / 2000W Peak Power
Frequency response	8Hz-250Hz(-3dB, Half space)	18Hz-250Hz(-3dB, Half space)
Max SPL output	101 dB @10Hz(Half space, 1 meter) 113.5 dB@20Hz(Half space, 1 meter) 125 dB @40Hz-200Hz（Half space, 1 meter) 130 dB @40Hz-200Hz（Typical room, 1 meter)	104.5 dB@20Hz(Half space, 1 meter) 116 dB @40Hz-200Hz（Half space, 1 meter) 120 dB @40Hz-200Hz（Typical room, 1 meter)
Voice coil	Double four-layer, 76mm, PICCAR wire	Four-layer, 52mm, PICCAW wire
Basket	Powder-coated cast aluminum basket	Powder-coated cast aluminum basket
Magnets	N50H Neodymium iron boron magnets	2 High-grade ferrite magnets
LMF Technology	Yes	Yes
Cabinet Structure	Sealed	Sealed
Peak-to-peak Excursion (Xmesh)	120mm	75mm
Linear Excursion (Dual-side Xmax)	70mm	45mm
Front panel	Control panel with screen	Control panel with screen
Input terminals (Back panel)	Line In: RCA Stereo (Left & Right) Balanced Input: XLR Stereo (Left & Right) Balanced Output: XLR Digital In: AES Digital Out: AES	Line In: RCA Stereo (Left & Right) Balanced Input: XLR Stereo (Left & Right) Balanced Output: XLR Digital In: AES Digital Out: AES
Multiple Subwoofer Connection	**DiBridge™** digital daisy chain connection Stardard XLR balance connection	**DiBridge™** digital daisy chain connection Stardard XLR balance connection
Volume Adjustment Range	-96dB to +12dB	-96dB to +12dB
Crossover (Low Pass)	50-200Hz	50-200Hz
Phase	Continuously adjustable from 0 to 180 degrees	Continuously adjustable from 0 to 180 degrees
Delay	Yes	Yes
Equalizer	15-Band Parametric EQ Supported Parameter Ranges: Frequency (Freq): From 10Hz to 1000Hz, adjustable in 1Hz increments Gain: From -24.0 dB to 12.0 dB, adjustable in 0.1 dB increments Width: From 0.03 Octave to 3 Octave, adjustable in 0.01 Octave increments	15-Band Parametric EQ Supported Parameter Ranges: Frequency (Freq): From 10Hz to 1000Hz, adjustable in 1Hz increments Gain: From -24.0 dB to 12.0 dB, adjustable in 0.1 dB increments Width: From 0.03 Octave to 3 Octave, adjustable in 0.01 Octave increments
Auto Equalizer	**AccuCal™** auto room equalizer system 32-band EQ with adaptive filter bandwidth technology, adjusting from 0.03 octaves to 3 octave	**AccuCal™** auto room equalizer system 32-band EQ with adaptive filter bandwidth technology, adjusting from 0.03 octaves to 3 octave
Presets	9	9
Software	Full-featured subwoofer management software for PC	Full-featured subwoofer management software for PC
Power selector	Off/On Automatically enters standby mode after 12 minutes of no signal	Off/On Automatically enters standby mode after 12 minutes of no signal
Volt Switch	115V/230V	115V/230V
Power Consumption	Standby: <22W Idle: <50W Maximum: 3200W	Standby: <16W Idle: <28W Maximum: 1450W
Grille	Fabric grille with aluminum-reinforced wooden frame	Fabric grille with aluminum-reinforced wooden frame
Finish	**TrueChrome™** Piano Lacquer	**TrueChrome™** Piano Lacquer
Color options	Samurai Black	Samurai Black/Lunar White/Ember Noir
Full size (H x W x D)	20.1 x 20.1 x 21.7 inches 510 x 510 x 550mm (without grille, without feet) 21.3 x W 20.1 x D 24.6 inches 540 x 510 x 625.5mm (with grille, with feet)	15 x 15 x 17.7 inches 380 x 380 x 450mm (without grille, without feet) 16.5 x 15 x 20 inches 417.9 x 380 x 508.5mm (with grille, with feet)
Weight	164 lbs (74.5kg)	62 lbs (28.1kg)
Shipping weight (L x W x H)	30.1 × 26.7 × 33.6 inches (including wheels) 764.5 × 677 × 854.5mm (including wheels)	24.4 x 19.8 x 20.7 inches 620 x 504 x 525mm
Shipping weight	260.2 lbs (118kg)	76 lbs (34.5kg)
Warranty	2 years (from original purchase date)	2 years (from original purchase date)

Appendix B: Product Information and Notices

Break-in period

The speaker driver used in Sub 1/Sub 5 loudspeakers is a complex mechanical component which requires a certain time to adapt in order to operate at its best and to become acclimatised to the temperature and humidity of the listening environment. This break-in period varies depending on the conditions in question and may take several weeks. To reduce this break- in period, we recommend operating your subwoofer for about 20 consecutive hours. Once the speaker driver's characteristics have totally stabilised, you will be able to enjoy the full capabilities of your subwoofer.

Special Precautions

Starke Sound loudspeakers require minimal maintenance—simply dust with a dry cloth. For more thorough cleaning, use a slightly damp cloth.

Never use solvents, detergents, alcohol-based or corrosive products, scrapers, or abrasive materials on any loudspeaker surface.

Keep all loudspeakers away from heat sources.

Warranty Conditions

All Starke Sound loudspeakers are covered by warranty through your authorized Starke Sound distributor. Your distributor can provide complete warranty details. Coverage extends at minimum to the legal warranty requirements in the country where the original purchase invoice was issued.

Environmental Disposal Notice



The symbol on this product indicates that it should not be disposed of with regular household waste. Please follow your local regulations for electronic waste disposal by taking it to a designated collection facility for electronic waste, or returning it to a retailer when purchasing a similar product.

In many regions, manufacturers have paid recycling fees to promote environmentally responsible processing of these products. Proper disposal contributes to resource reuse and recycling, minimizes environmental and health impacts, and helps avoid potential penalties for incorrect disposal.

Please consult your local waste management authorities for specific disposal requirements applicable to your region.

Disclaimer:

The illustrations of products, accessories, and user interfaces in this manual are schematic diagrams for reference only. There may be slight differences between the actual product and the illustrations. Please refer to the actual product. This manual is published by the brand owner and may make necessary changes to correct any printing errors or inaccurate information in this manual without prior notice.

Version: V1.0